LONG SEAMS

| COURSE | ORIENTATION |
|---|---|
| 1 | 0° |

Ship loose items:
NONE

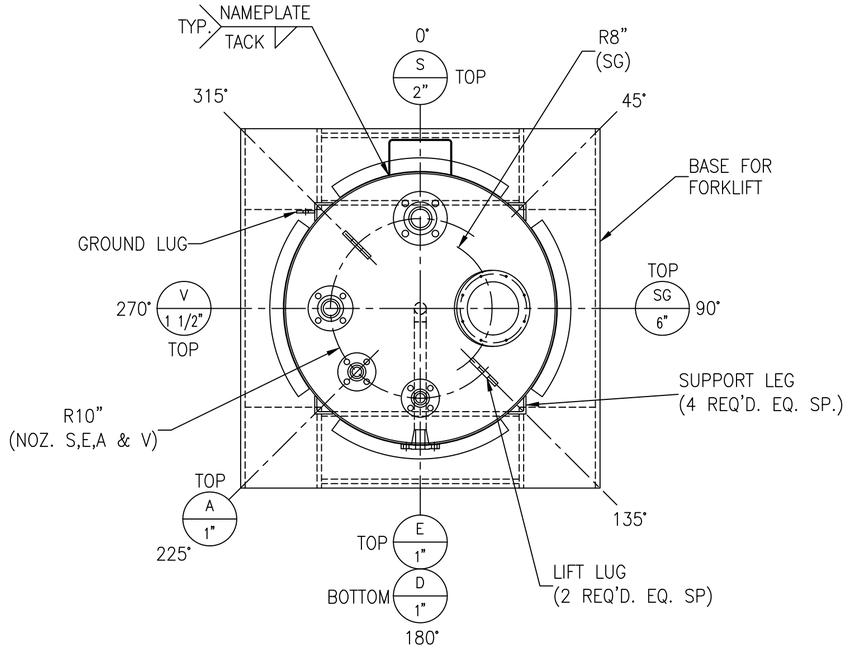


*NOTE: ALL ELEVATIONS ARE PULLED FROM
WELD SEAM FOR EASE OF FABRICATION

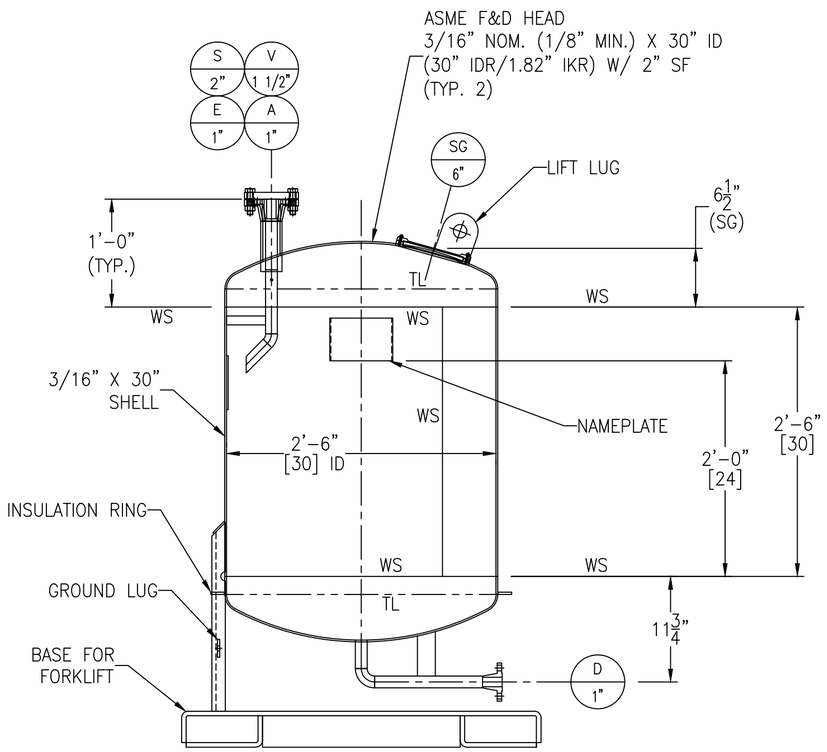


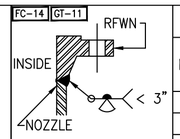


FIGURE NO. 2

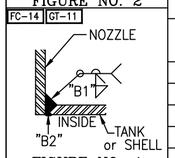


FIGURE NO. 4

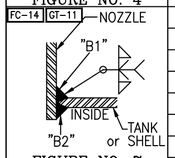


FIGURE NO. 7

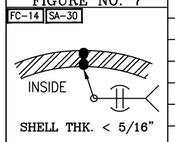


FIGURE NO. 9

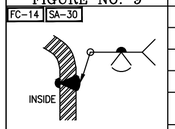


FOR HEADS
FIGURE NO. 11A

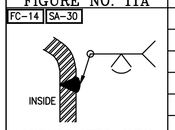


OUTSIDE WELD ONLY
FOR CLOSING HEADS
FIGURE NO. 11B

## NOZZLE SCHEDULE

| MARK | SERVICE | SIZE | RATING | TYPE / STYLE | NECK SCHED. | PROJECTION EXT. (℄) | PROJECTION INT. (MIN.) | WELD FIGURE | REPAD SIZE (WIDTH X THK.) | WELD SIZE "A1" | "A2" | "B1" | "B2" | "C1" | "C2" |
|---|---|---|---|---|---|---|---|---|---|---|---|---|---|---|---|
| A | FILL INLET (FROM DRUM PUMP) | 1" | 150# | RFWN W/ ELBOW | 40S | SEE DWG | SEE DWG | 2,7 | – | – | – | 3/16 | 1/8 | – | – |
| D | FEED TO PUMP SUCTION | 1" | 150# | RFWN W/ ELBOW | 40S | SEE DWG | – | 2,4 | – | – | – | 3/16 | 1/8 | – | – |
| E | NITROGEN PURGE | 1" | 150# | RFWN | 40S | SEE DWG | 1" | 2,7 | – | – | – | 3/16 | 1/8 | – | – |
| V | VENT TO ABOVE ROOF | 1 1/2" | 150# | RFWN | 40S | SEE DWG | – | 2,4 | – | – | – | 3/16 | 1/8 | – | – |
| SG | SIGHTGLASS (ON TANK PAD NOZZLE) | 6" | 150# | LUMIGLAS CIRCULAR SIGHT GLASS DIN28120 SIZE-125 | – | – | – | 4 | – | – | – | 3/16 | 1/8 | – | – |
| S | SPARE | 2" | 150# | RFWN W/ BLIND | 40S | SEE DWG | 1" | 2,7 | – | – | – | 3/16 | 1/8 | – | – |

## MATERIALS OF CONSTRUCTION

| | VESSEL |
|---|---|
| SHELL | SA240-316/316L |
| HEADS | SA240-316/316L |
| SIGHTGLASS | SS316 |
| NOZZLE NECKS | SA312-316/316L WLD & SA403-316/316L WPB |
| NOZZLE FLANGES | SA182F-316/316L |
| WEAR PLATE | SA240-316/316L |
| INTERNAL PIPE SUPPORT | SA240-316/316L |
| EXTERNAL PIPE SUPPORT | SA240-304/304L |
| GASKETS | PTFE |
| BOLTS/STUDS | SA-193 B7 (ZINC PLATED) |
| NUTS | SA-194 2H (ZINC PLATED) |
| COUPLINGS | – |
| SUPPORTS/HOLD DOWNS | SA240-304/304L & SA479-304/304L |
| LIFTING LUGS | SA240-304/304L |
| VACUUM RINGS | – |
| INSULATION RINGS | SA240-304/304L |
| GROUND LUG | SA240-304/304L |
| BAFFLE | – |
| BASE FOR FORKLIFT | SA240-304/304L |
| TANK CLIPS (LADDER) | – |
| HANDRAIL | – |
| HANDRAIL CLIPS | – |
| PLATFORM | – |
| PLATFORM CLIPS | – |
| DIPTUBE SUPPORT | – |
| JACKET SHELL | – |
| JACKET HEADS | – |
| JACKET NOZZLE NECKS | – |
| JACKET NOZZLE FLANGES | – |

## DESIGN DATA

| | VESSEL |
|---|---|
| DESIGN AND FAB. CODE | ASME (AS APPLICABLE) |
| CERT. STAMP REQ'D. | NO |
| DESIGN PRESSURE | 14 PSIG / -0.5 PSIG |
| DESIGN TEMPERATURE | 250° F |
| MIN. DESIGN METAL TEMP. | -20° F @ 14 PSIG |
| OPERATING PRESSURE | ATM |
| OPERATING TEMPERATURE | 55°-110° F |
| JOINT EFFICIENCY HEADS | 0.70 |
| JOINT EFFICIENCY SHELL | 0.70 |
| CORROSION ALLOWANCE | 0" |
| SPECIFIC GRAVITY | 0.80 |
| EARTHQUAKE ZONE | Ss = (0.111) S1 = (0.055) |
| WIND LOAD | INDOOR |
| STRESS RELIEF | NOT REQ'D |
| RADIOGRAPHIC EXAM | NOT REQ'D |
| DYE PENETRANT EXAM | NOT REQ'D |
| MAGNETIC PARTICLE EXAM | NOT REQ'D |
| HYDROSTATIC TEST | 19 PSIG / GUAGE #11 |
| PNEUMATIC TEST | NOT REQ'D |
| JKT HYDRO TEST | – |
| JKT DESIGN AND FAB. CODE | – |
| JKT CERT. STAMP REQ'D. | – |
| JKT DESIGN PRESSURE | – |
| JKT DESIGN TEMPERATURE | – |
| JKT MIN. DESIGN METAL TEMP. | – |
| JKT OPERATING PRESSURE | – |
| JKT OPERATING TEMPERATURE | – |
| JKT JOINT EFFICIENCY HEADS | – |
| JKT JOINT EFFICIENCY SHELL | – |

## VESSEL FINISH

| | |
|---|---|
| INTERIOR WELD TREATMENT: | SAV TANK STANDARD |
| EXTERIOR WELD TREATMENT: | SAV TANK STANDARD |
| SAV TANK FINISHING STANDARD: | SEE NOTE 6 |
| INSULATION: | 1 1/2" BY OTHERS |
| PAINTING: | N/A |

## VESSEL CAPACITY AND WEIGHTS

| | |
|---|---|
| OPERATING CAPACITY | 100 GAL. |
| FULL CAPACITY | 120 GAL. |
| EMPTY SHIPPING WEIGHT | 900 LBS. |
| WEIGHT FULL OF WATER | 2000 LBS. |
| WEIGHT FULL OF PRODUCT | 1800 LBS. |

ASME SECT. VIII, DIV. 1
2023 EDITION

ENG. _____ DATE: _____

Q.C. _____ DATE: _____

A.I. _____ DATE: _____

This drawing is issued for customer approval. please review, make approval changes (if any) in red. check the appropriate box, sign & date.

- ☐ Approval – no changes. Please proceed with fabrication.
- ☐ Approved as noted. Please proceed with fabrication
- ☐ Not approved. Please make changes and resubmit.

Customer signature _____ Date _____

## GENERAL NOTES

1.) COVER ALL FLANGES, OPENINGS & MACHINED SURFACES PRIOR TO SHIPMENT UNLESS OTHERWISE NOTED.
2.) BOLT HOLES TO STRADDLE 0° & 180° UNLESS OTHERWISE NOTED.
3.) REPADS TO HAVE (1) ø1/4" NPT TELL-TALE HOLES FOR PNEUMATIC TESTING AT 2 PSIG FOR PRESSURE RETAINING PARTS. ALL OTHER REPADS TO HAVE (1) ø1/4" WEEP HOLE AT LOWEST POINT ON PAD.
4.) ASME CODE VESSELS TO BE IN ACCORDANCE WITH UG-80 & UG-81. TOLERANCES: +/- 1/8" FOR DIMENSIONS AND +/- 2 DEGREES FOR ORIENTATIONS.
5.) ASME MATERIALS TO CONFORM TO THE FOLLOWING: FLANGES – B16.5, FITTINGS – B16.9 & COUPLINGS – B16.11.
6.) PICKLE ALL EXTERIOR WELDS. PASSIVATE INTERIOR & EXTERIOR OF VESSEL.

| REV | D.BY | C.BY | DATE | DESCRIPTION |
|---|---|---|---|---|
| 2 | | | | AS BUILT |
| 1 | MM | AD | 4/8/24 | CERTIFIED |
| 0 | MM | AD | 3/4/24 | APPROVAL |

⚠ REVISIONS


Savannah Tank & Equipment Corp.
1517 Telfair Road, Savannah, GA 31415
(912) 233-8902


DRAWN BY: MM
CHK'D BY: AD
APPROVED BY: NP
SCALE: 1" = 1'-0"

CYTEC INDUSTRIES INC.
DTBPO PORTABLE TANK
EQUIP. #3-60T2
CUST. PO #4504914969

DRAWING NO.: 006-24-1 SHT 1 OF 3 REV. SET 1